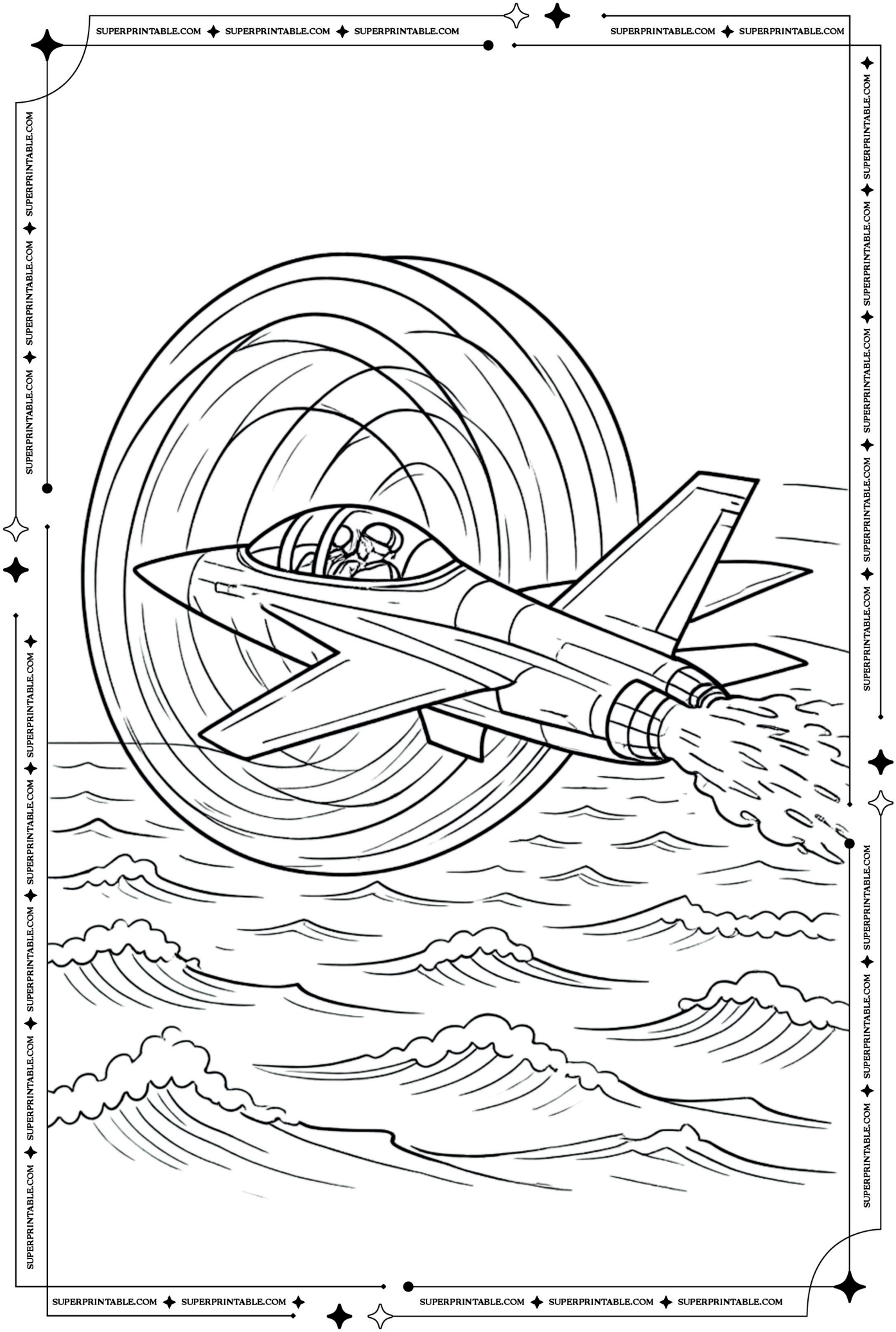

SUPERPRINTABLE.COM ✦ SUPERPRINTABLE.COM ✦ SUPERPRINTABLE.COM